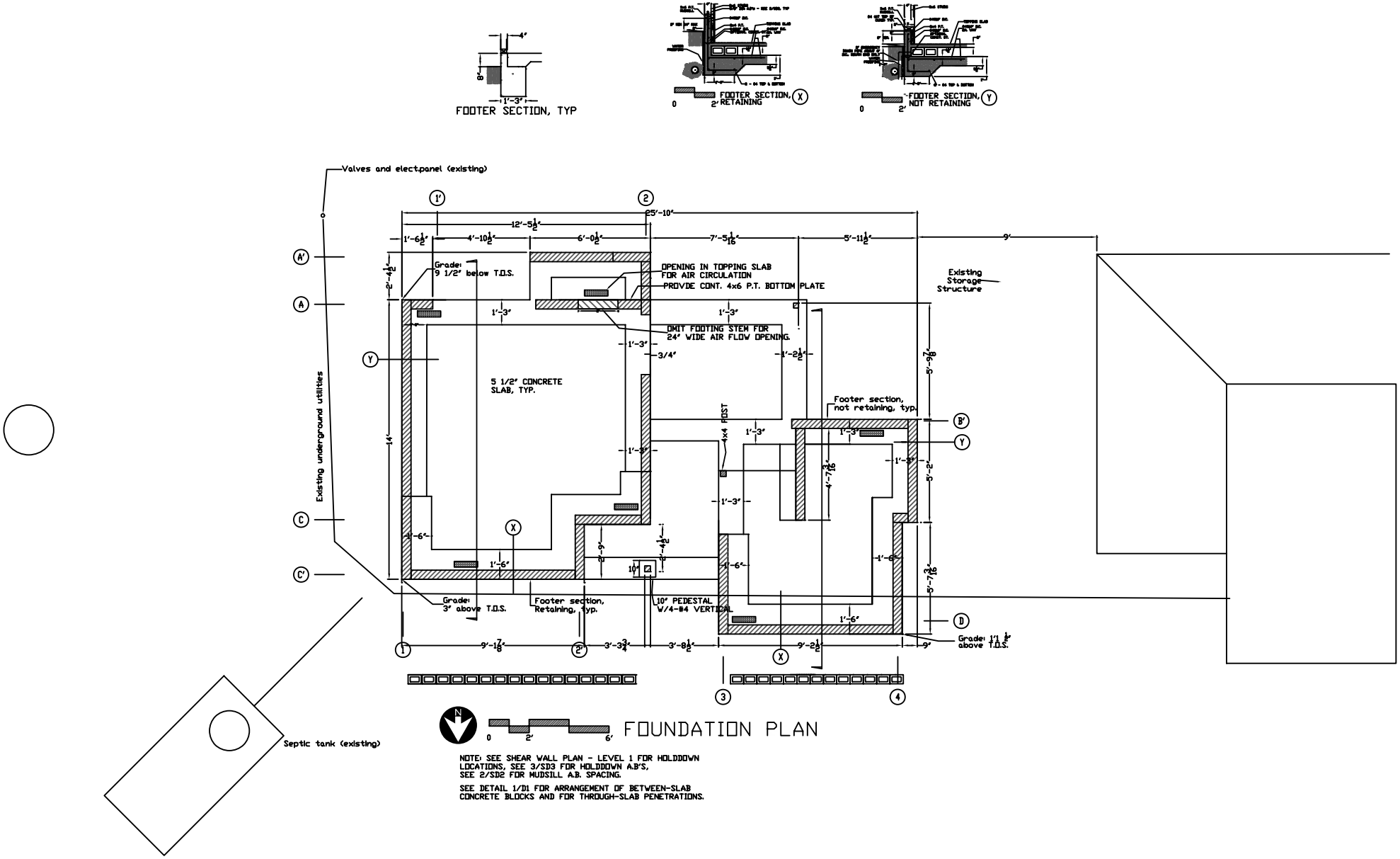

NOTE: SEE SHEAR WALL PLAN - LEVEL 1 FOR HOLDDOWN LOCATIONS, SEE 3/SD3 FOR HOLDDOWN A.B'S, SEE 2/SD2 FOR MUDSILL A.B. SPACING.

SEE DETAIL 1/D1 FOR ARRANGEMENT OF BETWEEN-SLAB CONCRETE BLOCKS AND FOR THROUGH-SLAB PENETRATIONS.

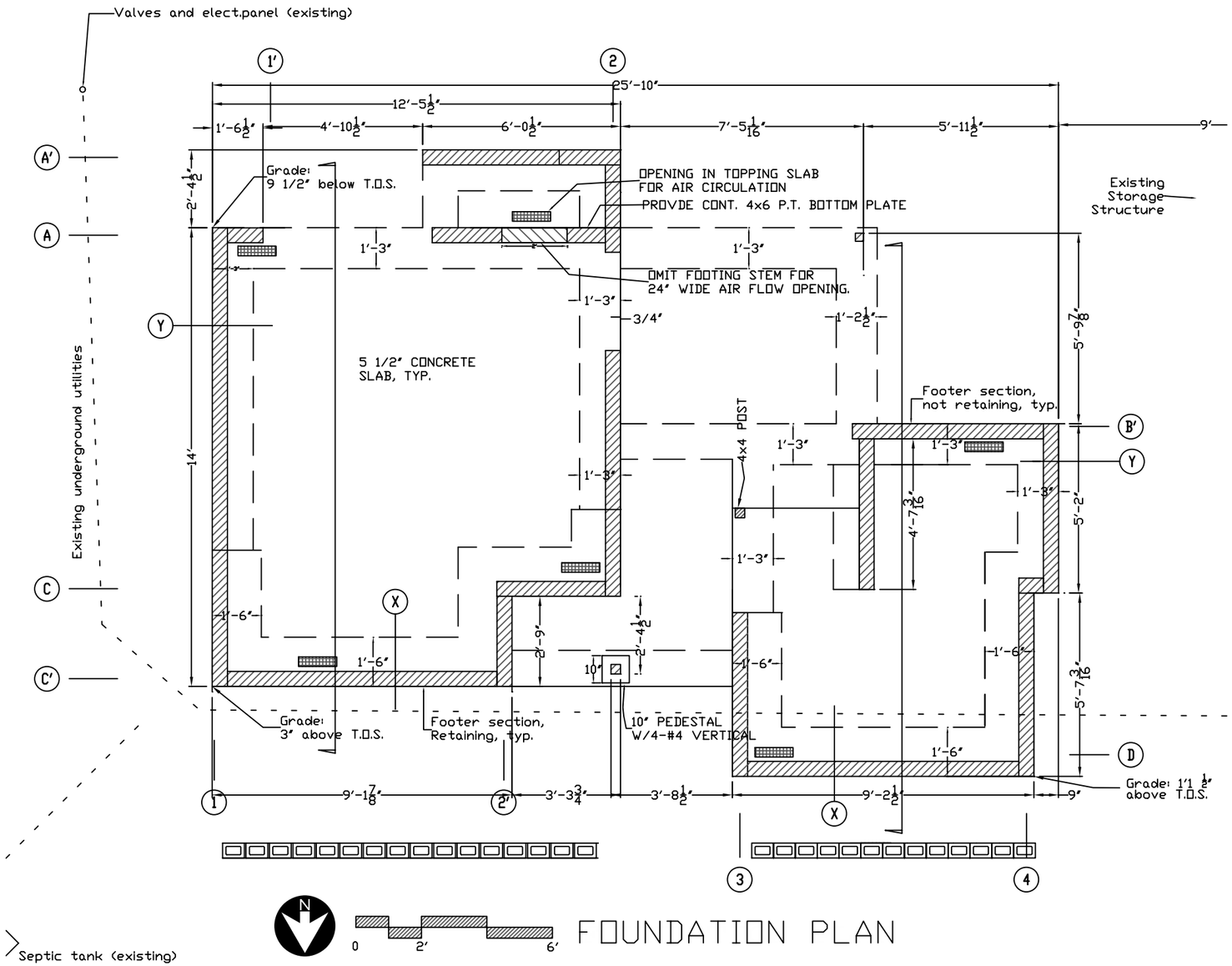

FOUNDATION PLAN

NOTE: SEE SHEAR WALL PLAN - LEVEL 1 FOR HOLDDOWN LOCATIONS, SEE 3/SD3 FOR HOLDDOWN A.B'S, SEE 2/SD2 FOR MUDSILL A.B. SPACING.

SEE DETAIL 1/D1 FOR ARRANGEMENT OF BETWEEN-SLAB CONCRETE BLOCKS AND FOR THROUGH-SLAB PENETRATIONS.

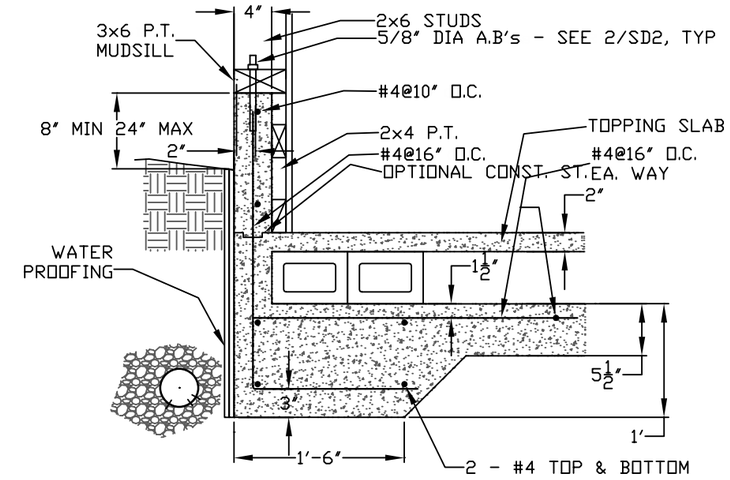

FOOTER SECTION, RETAINING (X)

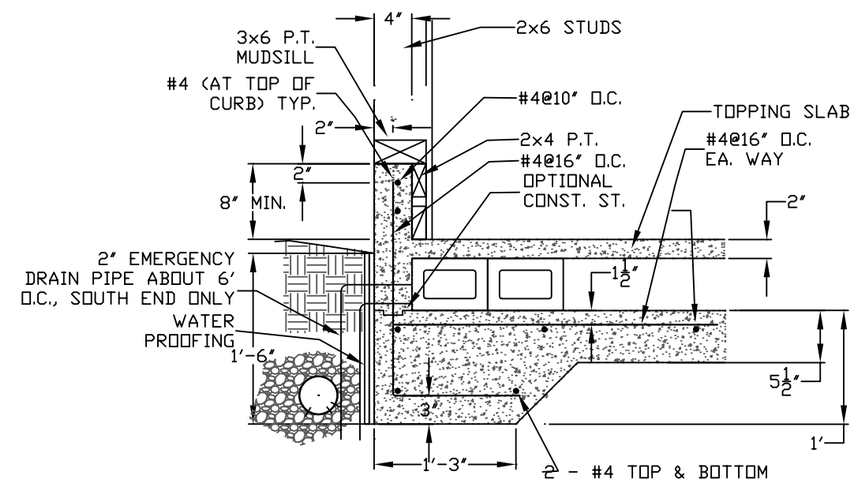

FOOTER SECTION, NOT RETAINING (Y)

	FOUNDATION PLAN
PROJ	Leaning Tower Bath, Wicinas/Nishizawa
DATE	5/5/09 REV 8/2/2009 DWG BY: B. WICINAS
FOR	51101 Nash Mill Rd, Philo 95466
	bwicinas@pacbell.net 510 848-1797

2

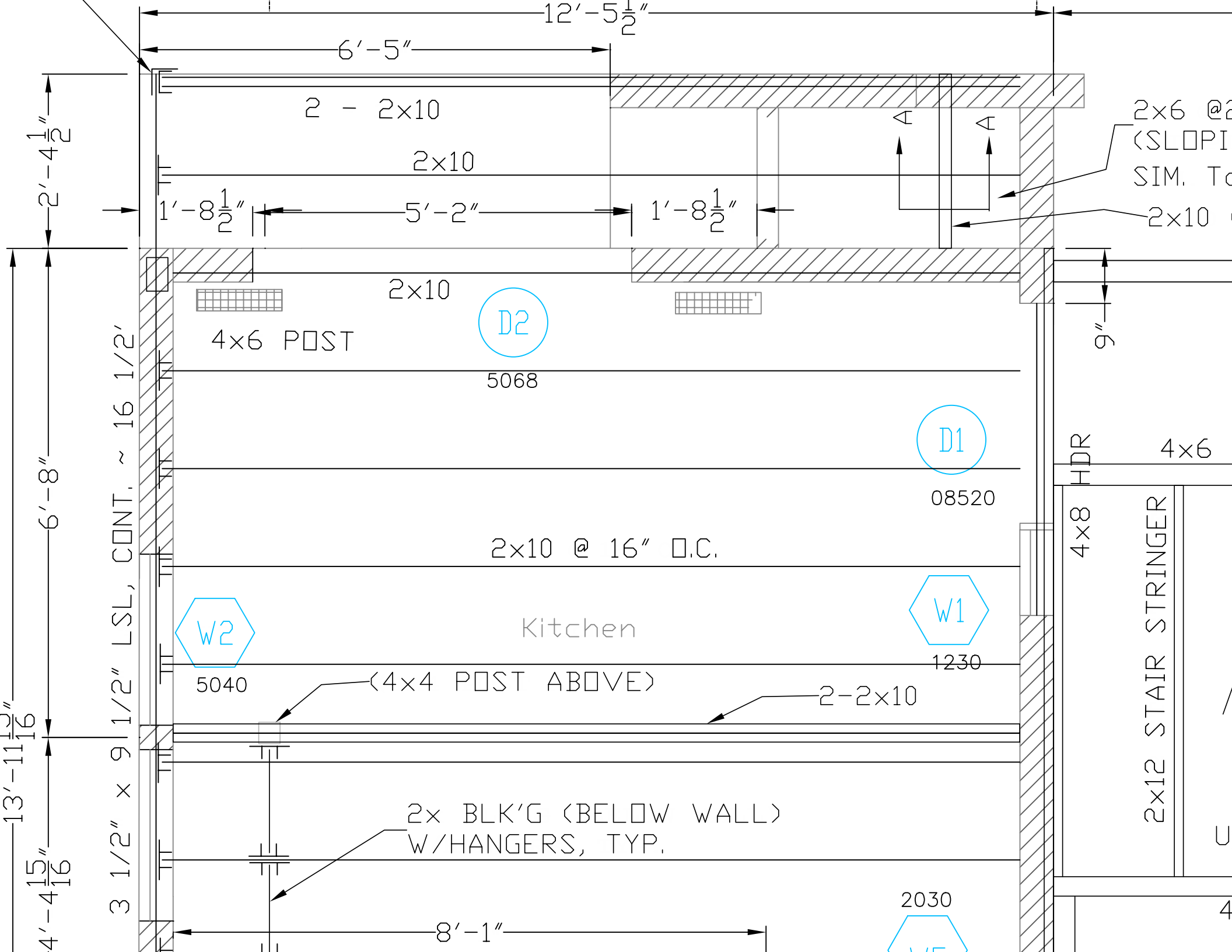
12′-5½″
6′-5″
2 - 2x10
2x10
1′-8½″
5′-2″
1′-8½″
2′-4½″
2x6 @2
(SLOPI
SIM. To
2x10
2x10
4x6 POST
D2
5068
9″
D1
08520
4x6
HDR
4x8
2x12 STAIR STRINGER
6′-8″
2x10 @ 16″ O.C.
W2
5040
Kitchen
W1
1230
(4x4 POST ABOVE)
2-2x10
13′-11 13/16″
3 1/2″ x 9 1/2″ LSL, CONT. ~ 16 1/2′
2x BLK'G (BELOW WALL)
W/HANGERS, TYP.
4′-4 15/16″
8′-1″
2030

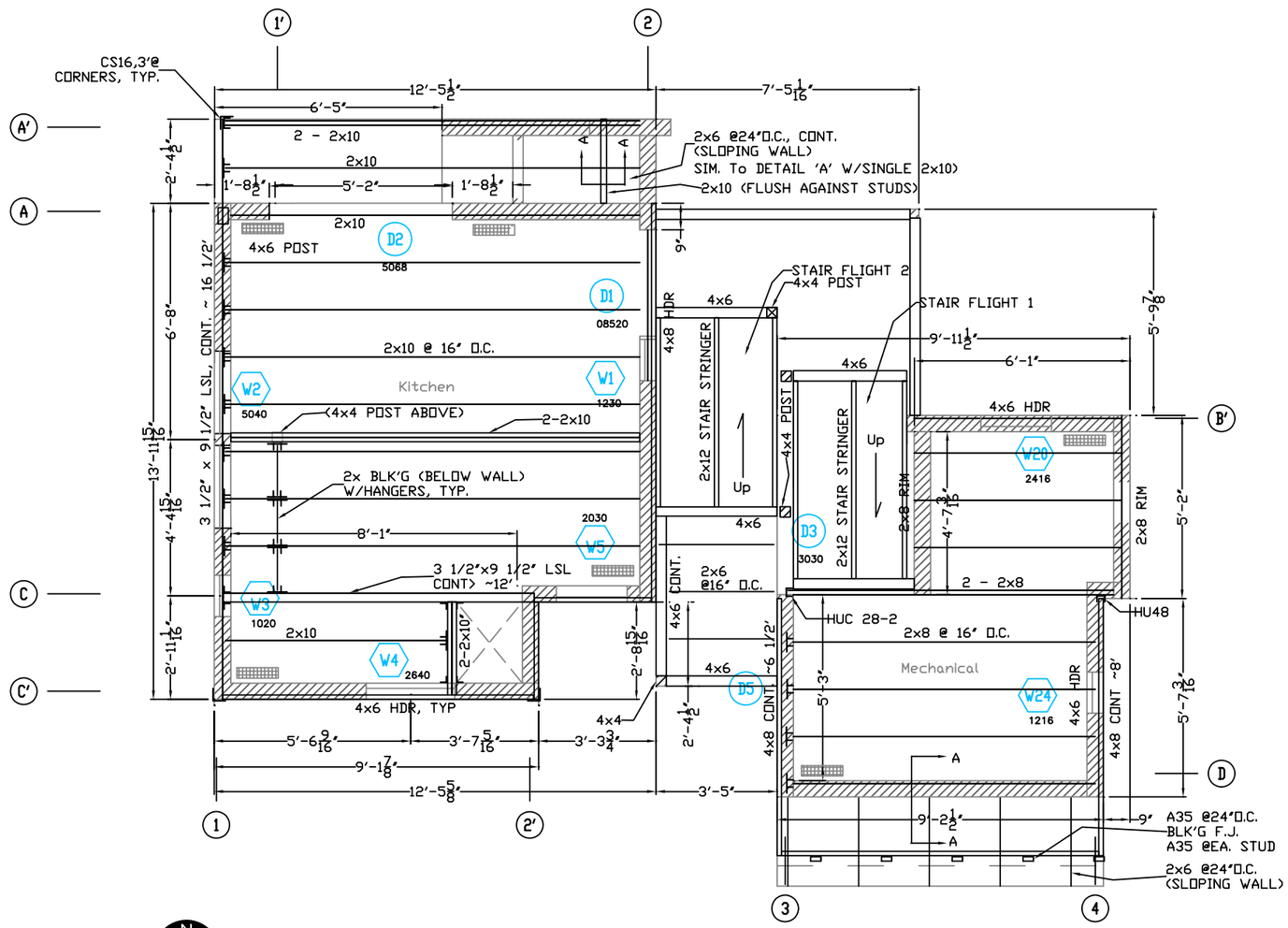

N

0 2' 6'

FRAMING PLAN 1ST FLOOR

	FRAMING PLAN 1ST FLOOR
PROJ	Leaning Tower Bath, Wicinas/Nishizawa
DATE	4/3/09 REV 8/2/2009 DWG BY: B. WICINAS
FOR	51101 Nash Mill Rd, Philo 95466
	bwicinas@pacbell.net 510 848-1797

E1

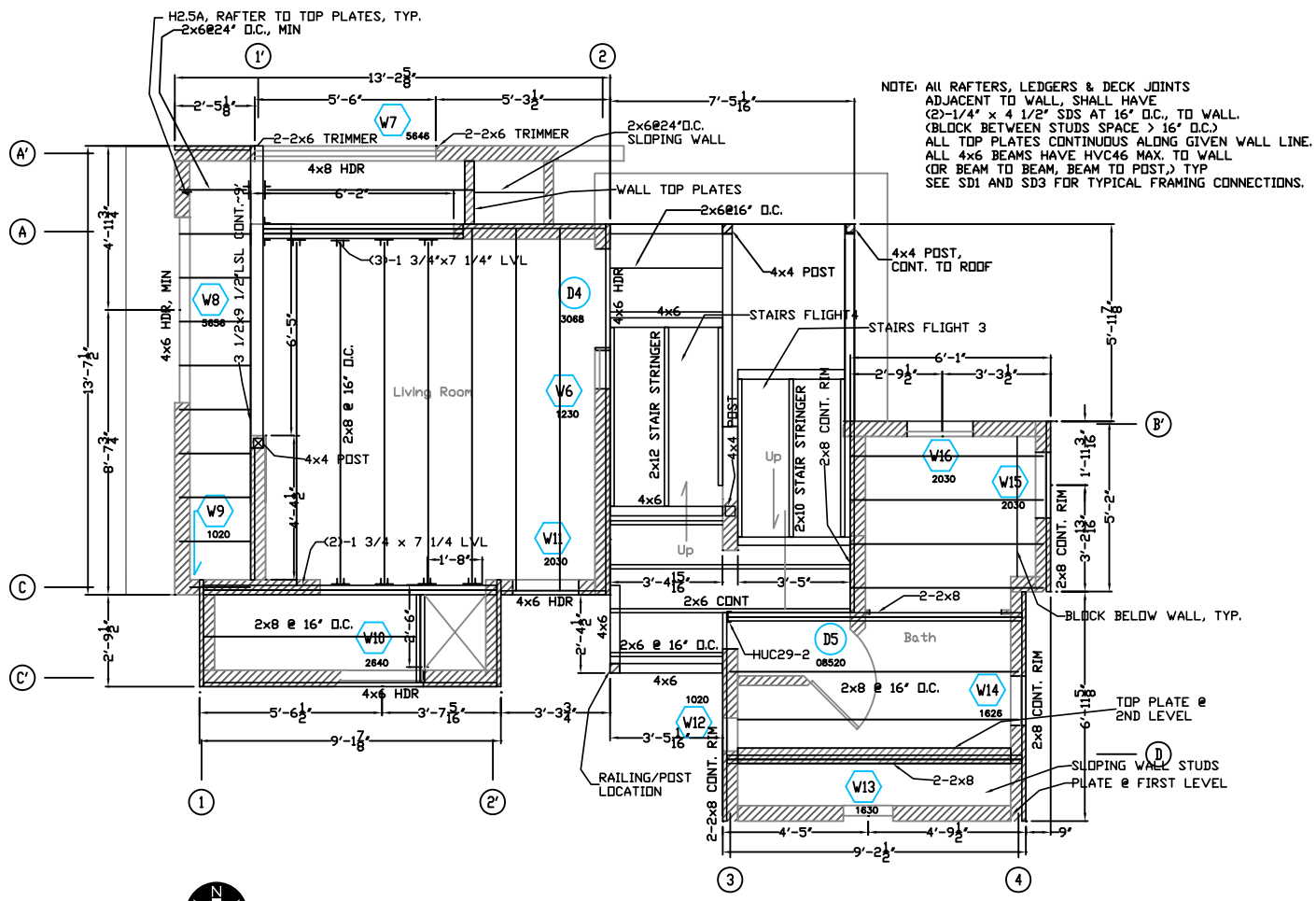

FRAMING LEVEL 2

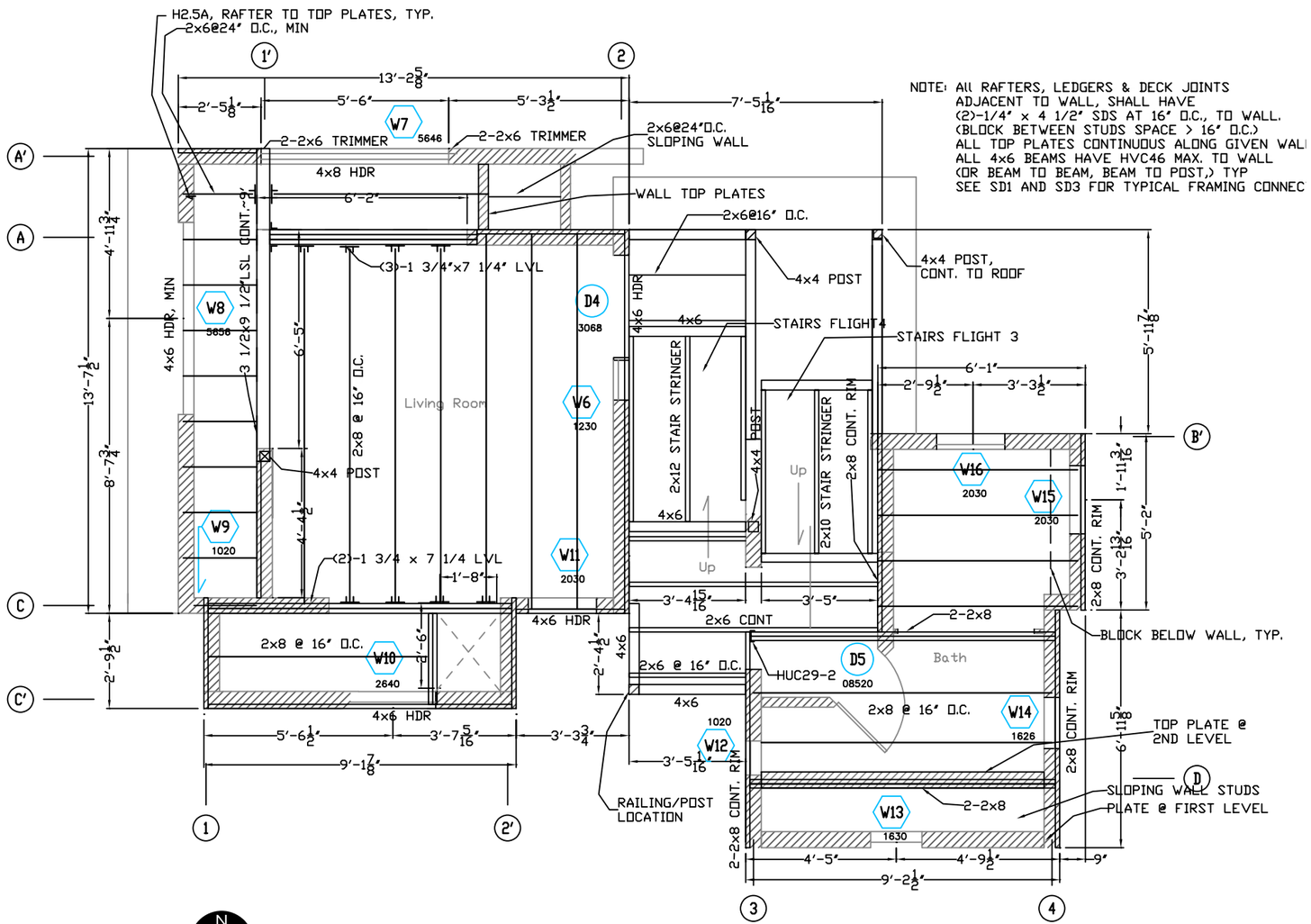

FRAMING LEVEL 2

PROJ Leaning Tower Bath, Wicinas/Nishizawa

DATE 4/3/09 REV 8/2/2009 DWG BY: B. WICINAS

FOR 51101 Nash Mill Rd, Philo 95466

bwicinas@pacbell.net 510 848-1797

E2

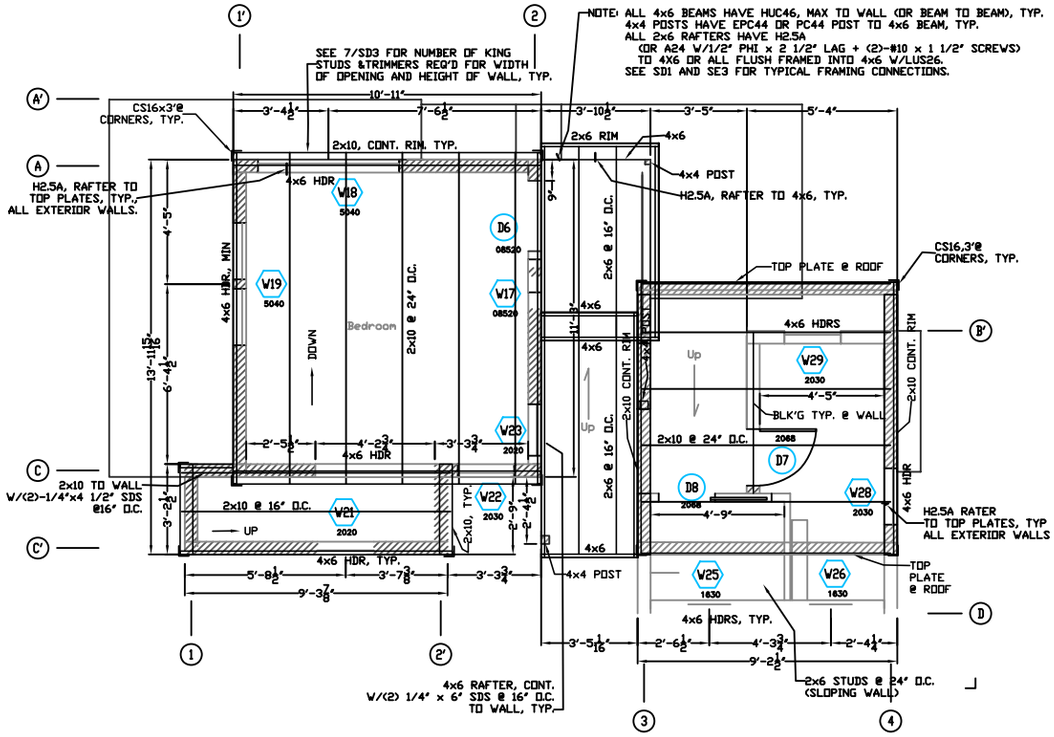

ROOF FRAMING PLAN

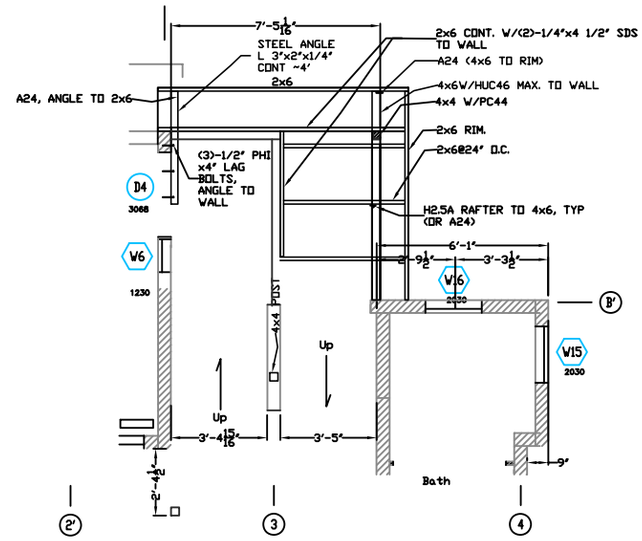

ROOF FRAMING PLAN INTERMEDIATE

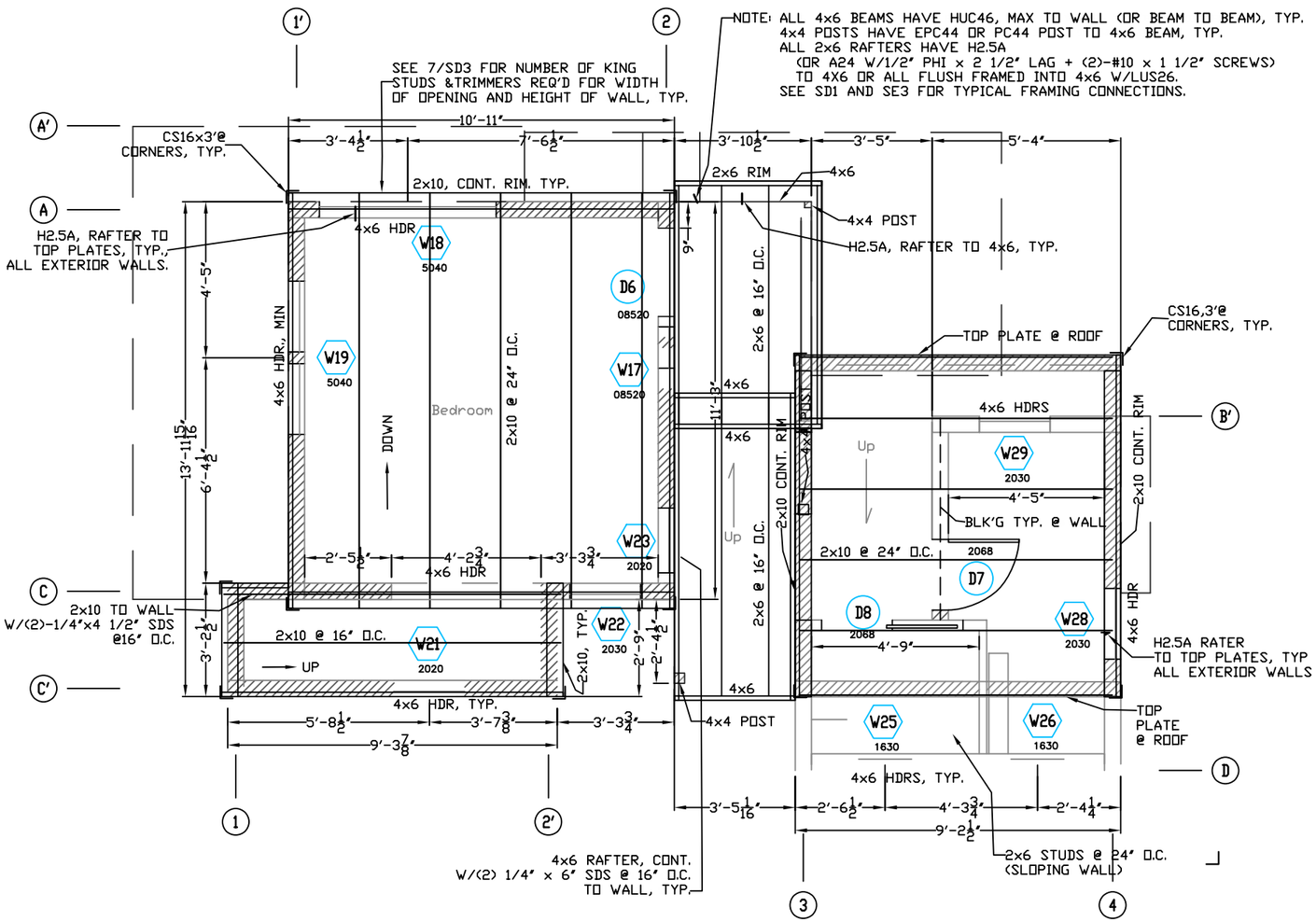

ROOF FRAMING PLAN

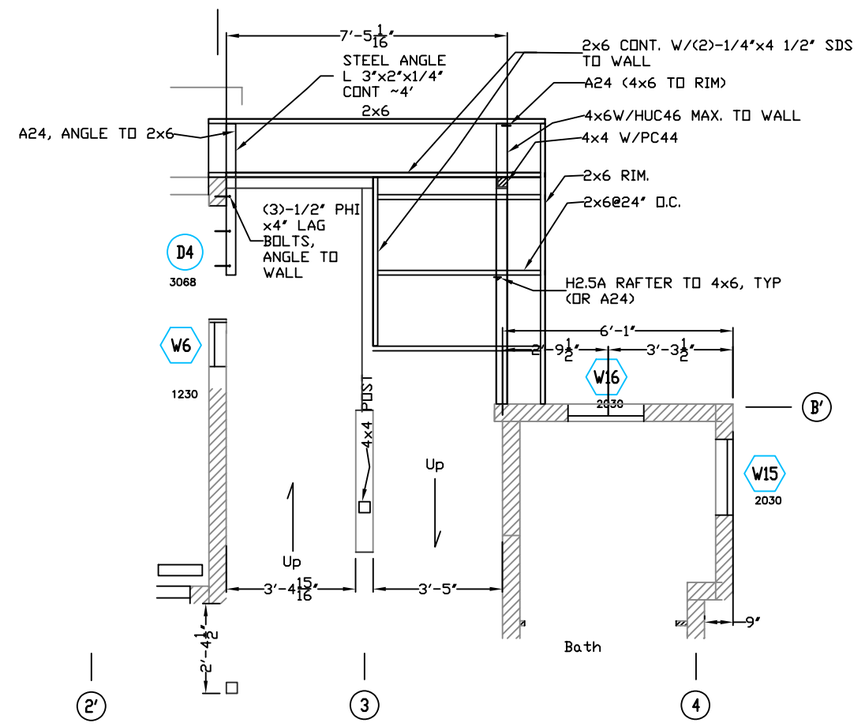

ROOF FRAMING PLAN
INTERMEDIATE

	ROOF FRAMING PLAN
PROJ	Leaning Tower Bath, Wicinas/Nishizawa
DATE	4/3/09 REV 8/2/2009 DWG BY: B. WICINAS
FOR	51101 Nash Mill Rd, Philo 95466
	bwicinas@pacbell.net 510 848-1797

E3

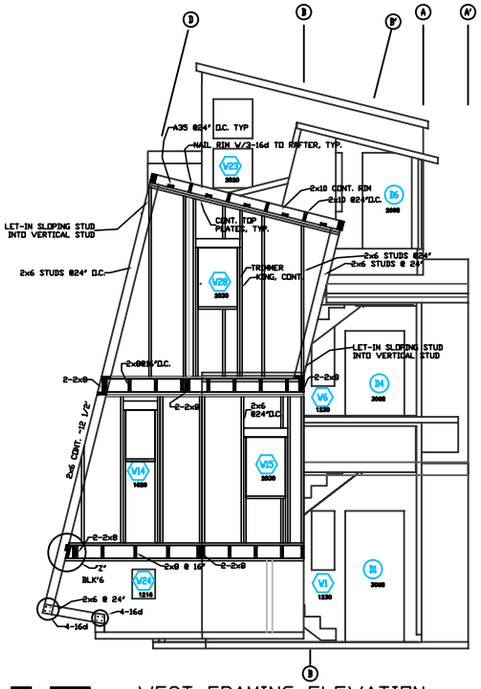

WEST FRAMING ELEVATION

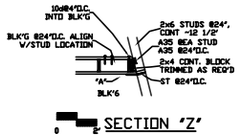

SECTION "Z"

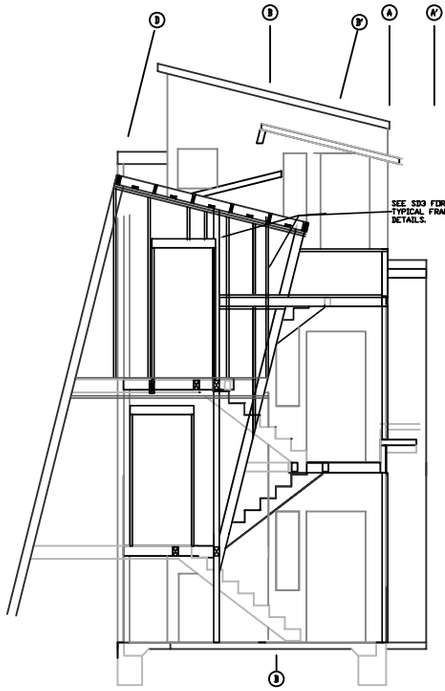

FRAMING SECTION AT ③

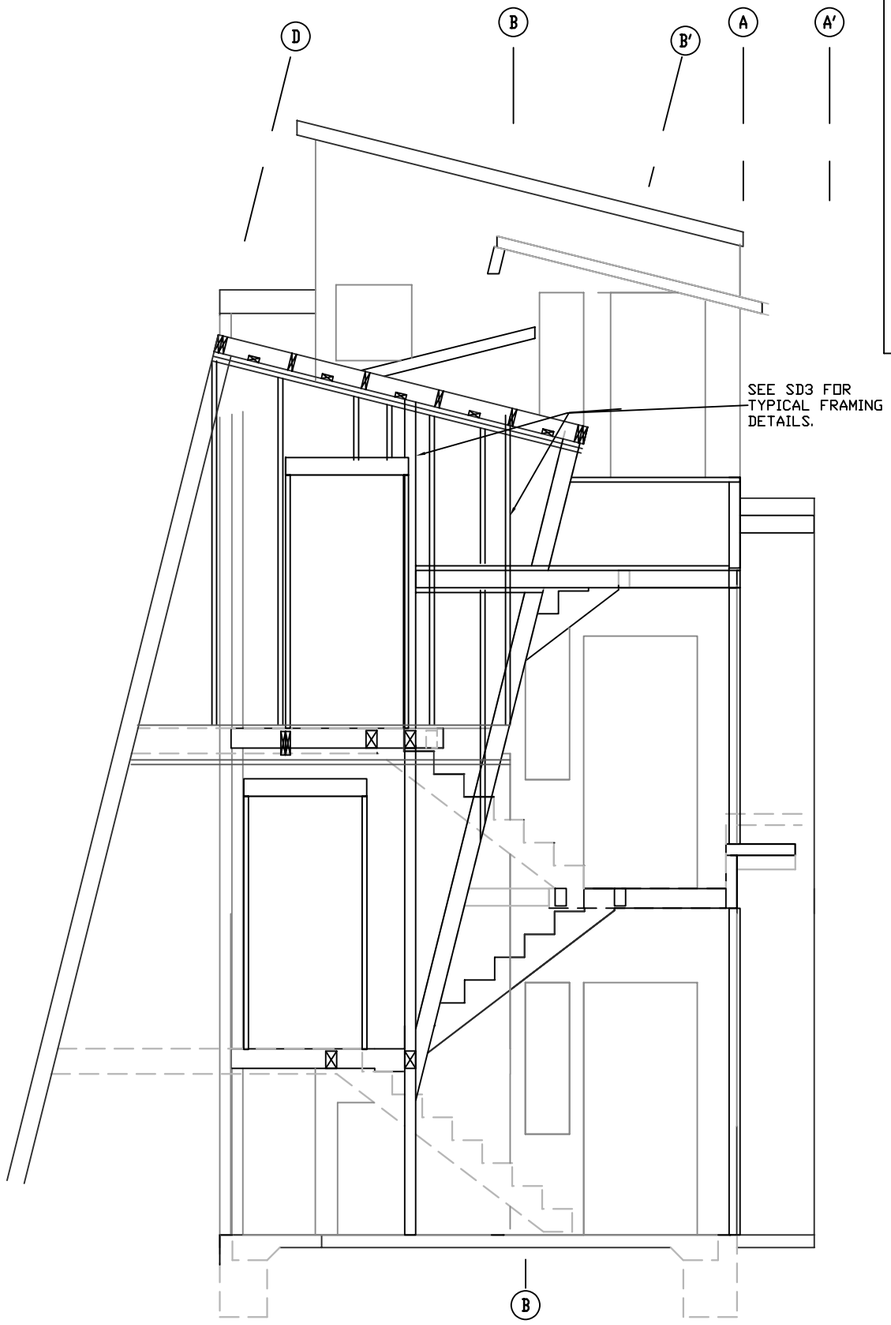

0 2' 6' FRAMING SECTION AT 3

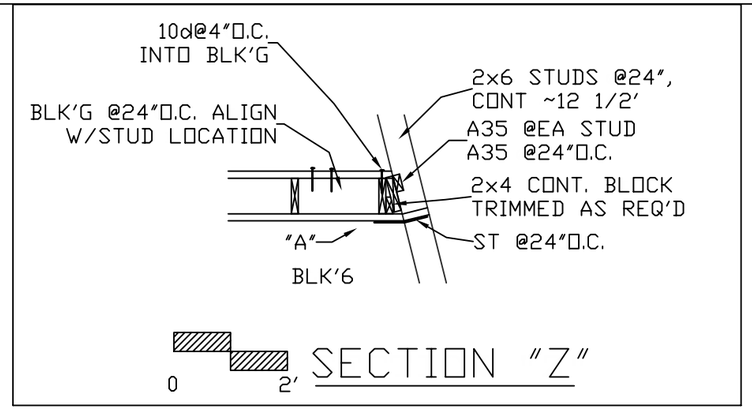

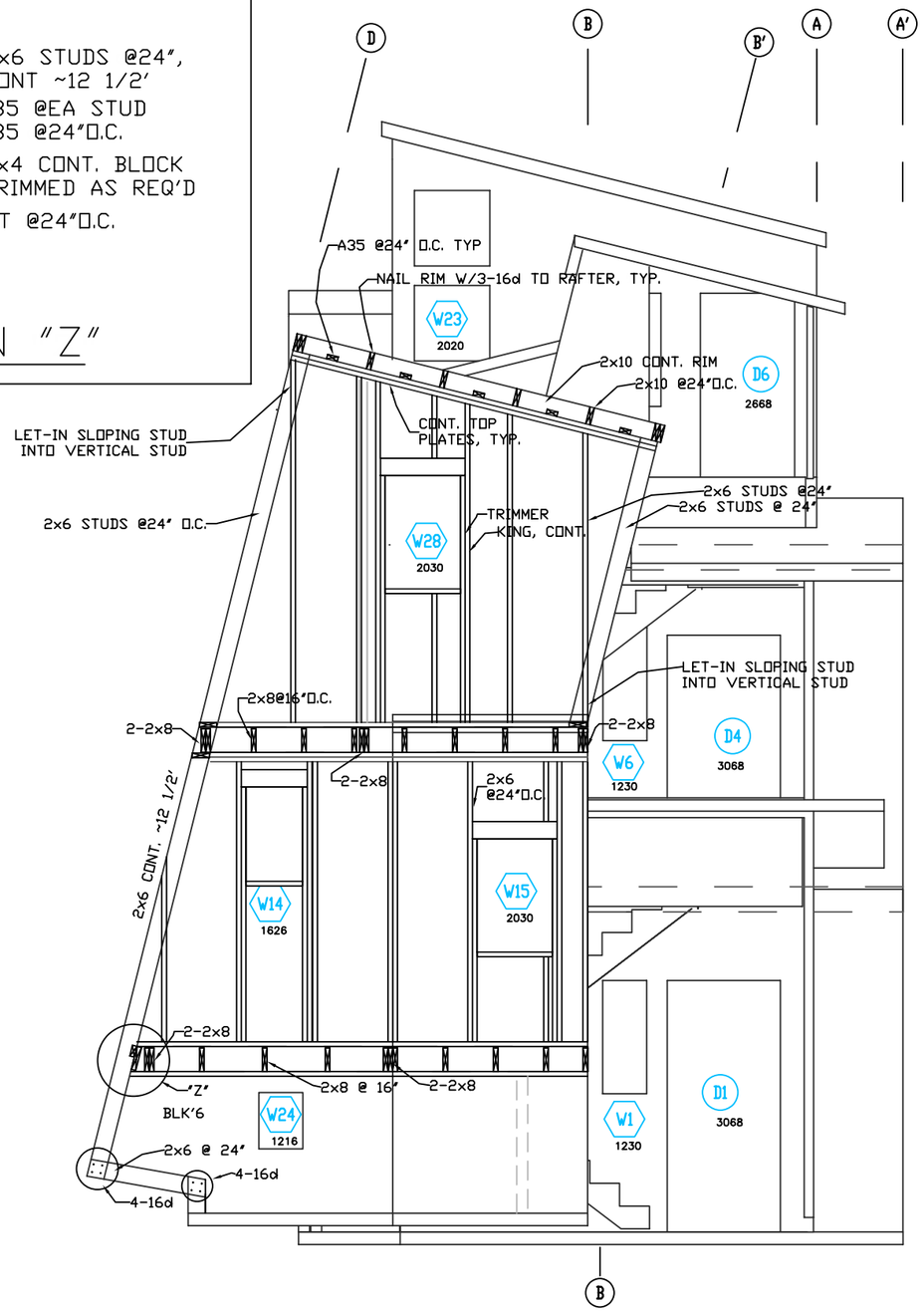

0 2' 6' WEST FRAMING ELEVATION

WEST FRAMING ELEVATION

PROJ Leaning Tower Bath, Wicinas/Nishizawa

DATE 4/3/09 REV 8/2/2009 DWG BY: B. WICINAS

FOR 51101 Nash Mill Rd, Philo 95466

bwicinas@pacbell.net 510 848-1797

E4

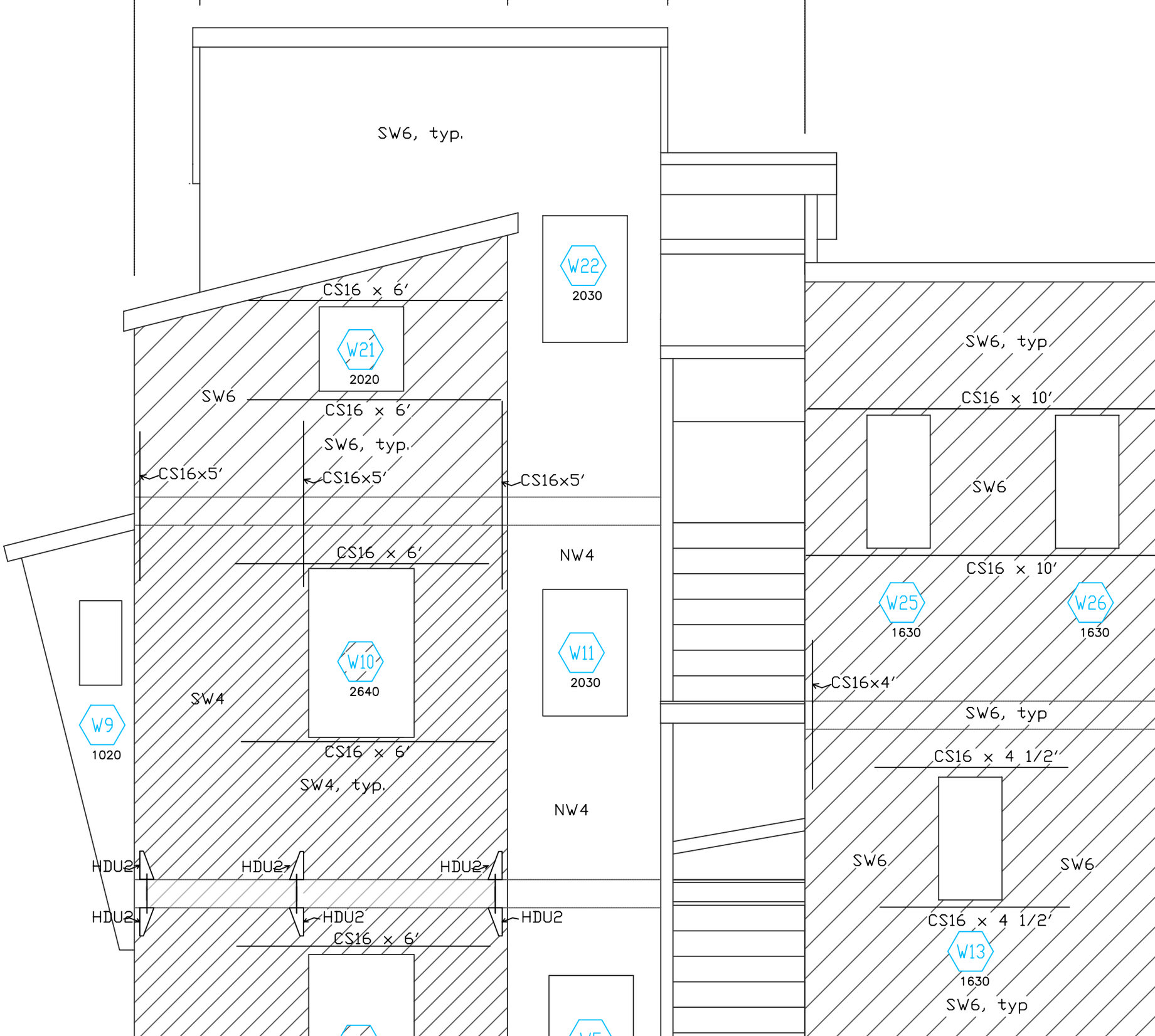
SW6, typ.
W22
2030
CS16 x 6'
W21
2020
SW6
CS16 x 6'
SW6, typ.
CS16x5'
CS16x5'
CS16x5'
CS16 x 6'
NW4
W10
2640
W11
2030
SW4
W9
1020
CS16 x 6'
SW4, typ.
NW4
HDU2
HDU2
HDU2
HDU2
HDU2
HDU2
CS16 x 6'
SW6, typ
CS16 x 10'
SW6
CS16 x 10'
W25
1630
W26
1630
CS16x4'
SW6, typ
CS16 x 4 1/2'
SW6
SW6
CS16 x 4 1/2'
W13
1630
SW6, typ

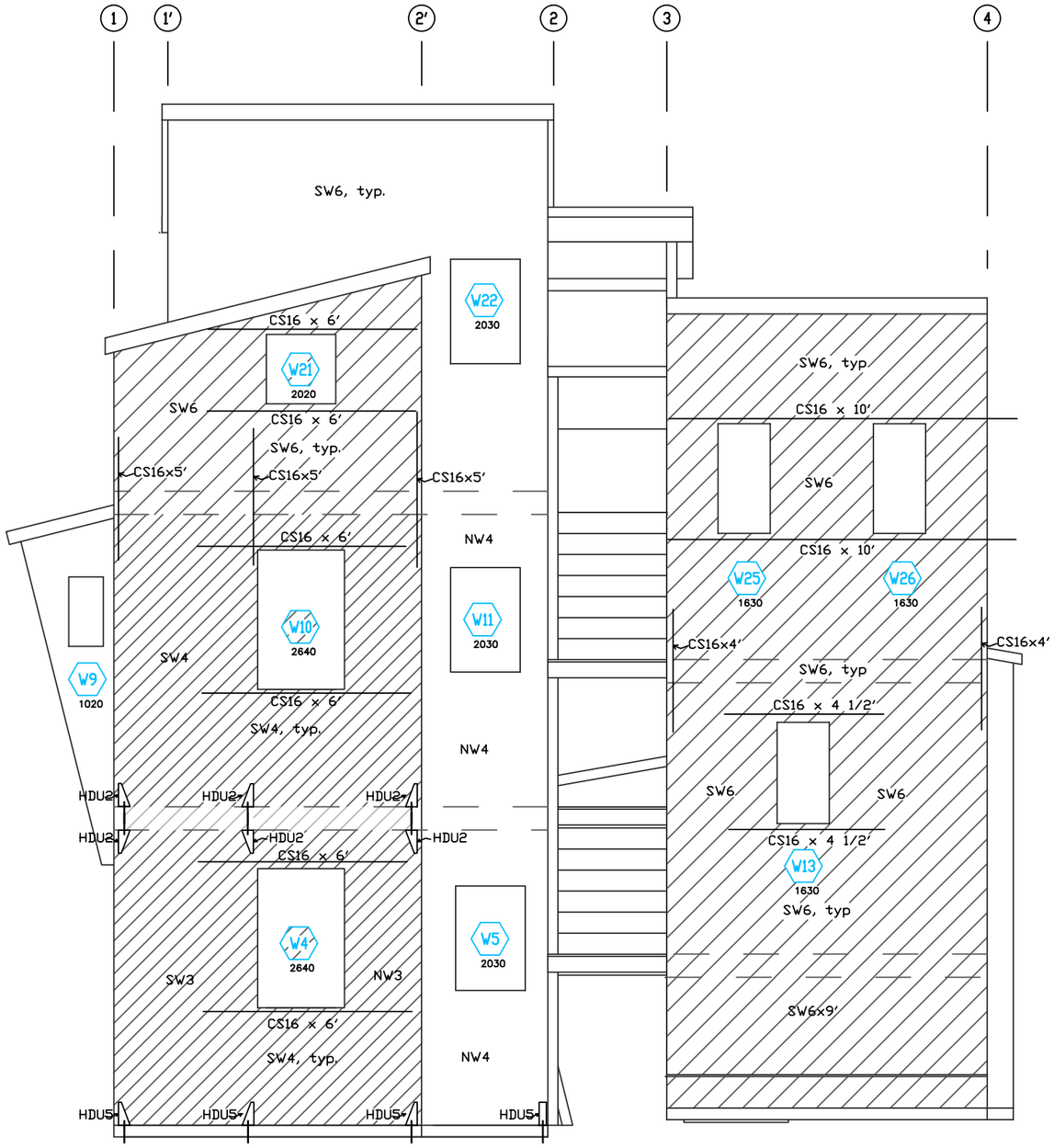

NORTH ENGR ELEV

0 2' 6'

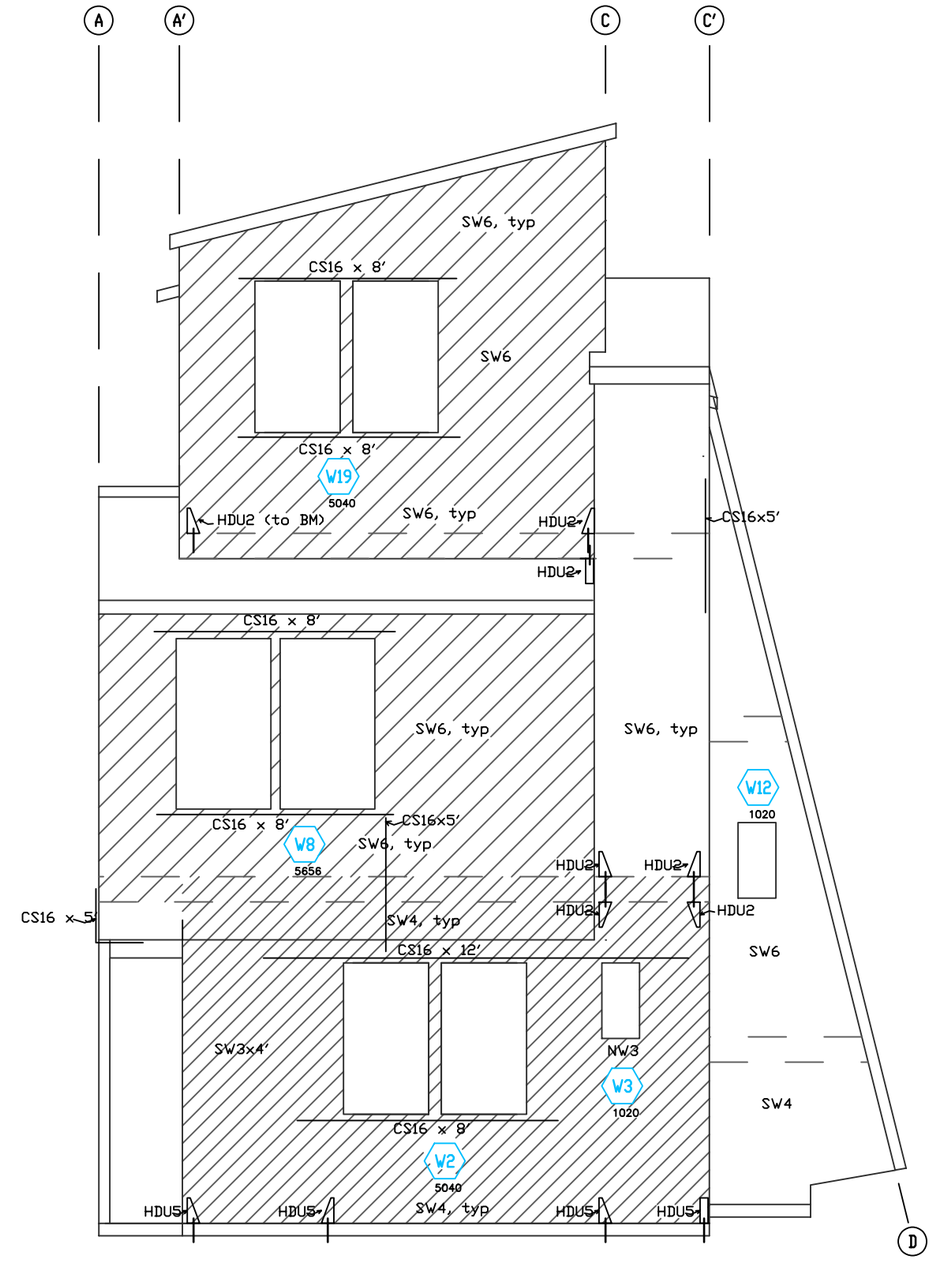

EAST ENGR ELEV

0 2' 6'

Engineering Elev East, North

PROJ Leaning Tower Bath, Wicinas/Nishizawa

DATE 4/3/09 REV 8/2/2009 DWG BY: B. WICINAS

FOR 51101 Nash Mill Rd, Philo 95466

bwicinas@pacbell.net 510 848-1797

E9

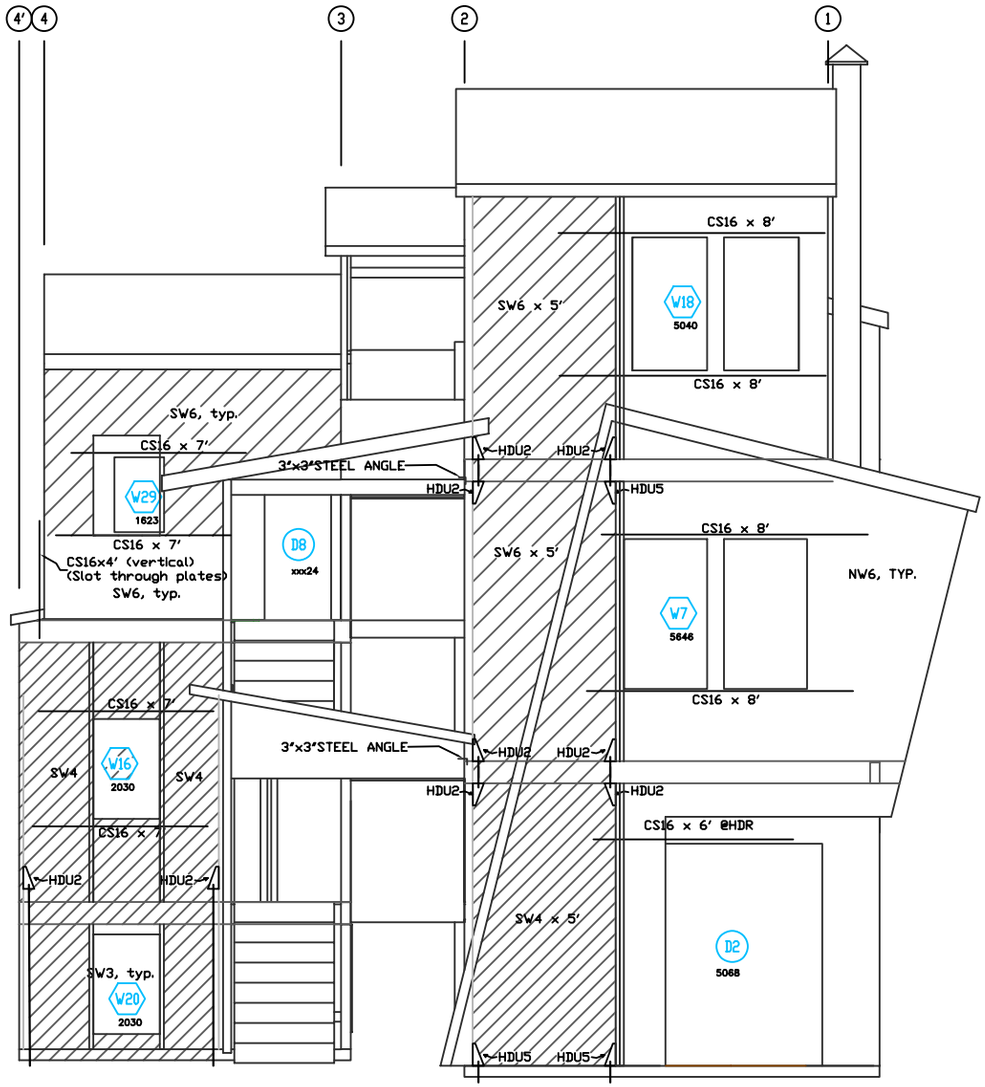

ENGR SOUTH ELEVATION

0 2' 6'

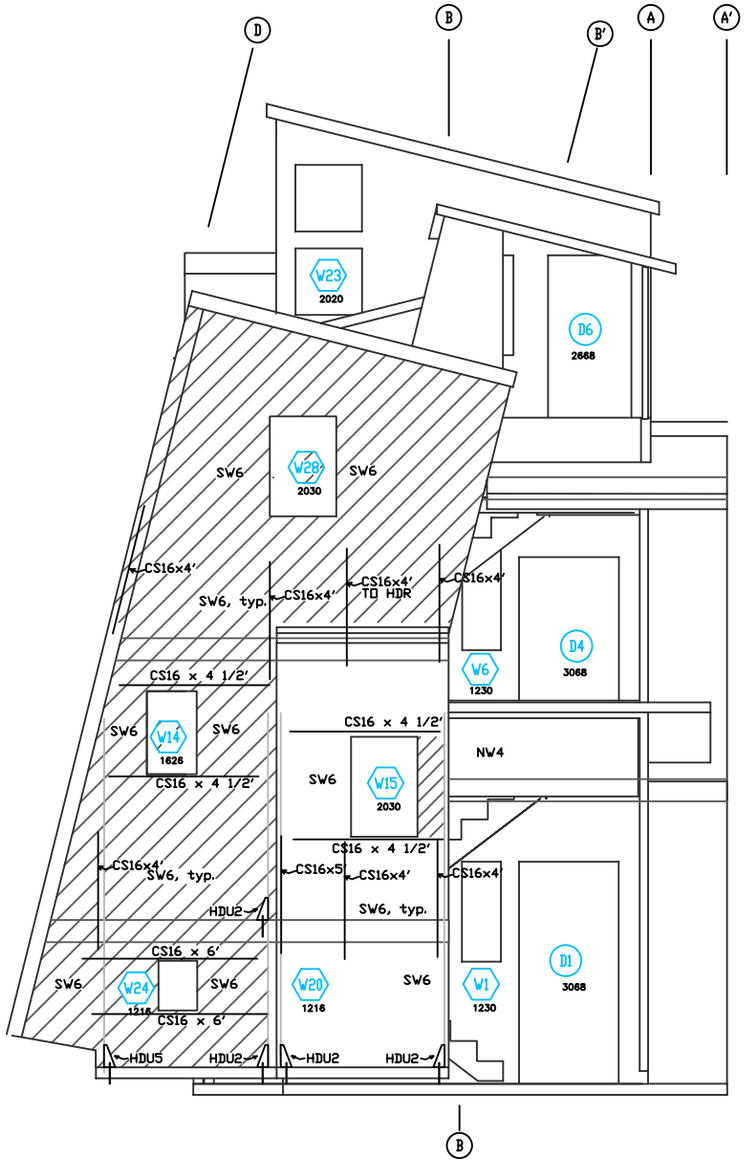

ENGR WEST ELEVATION

0 2' 6'

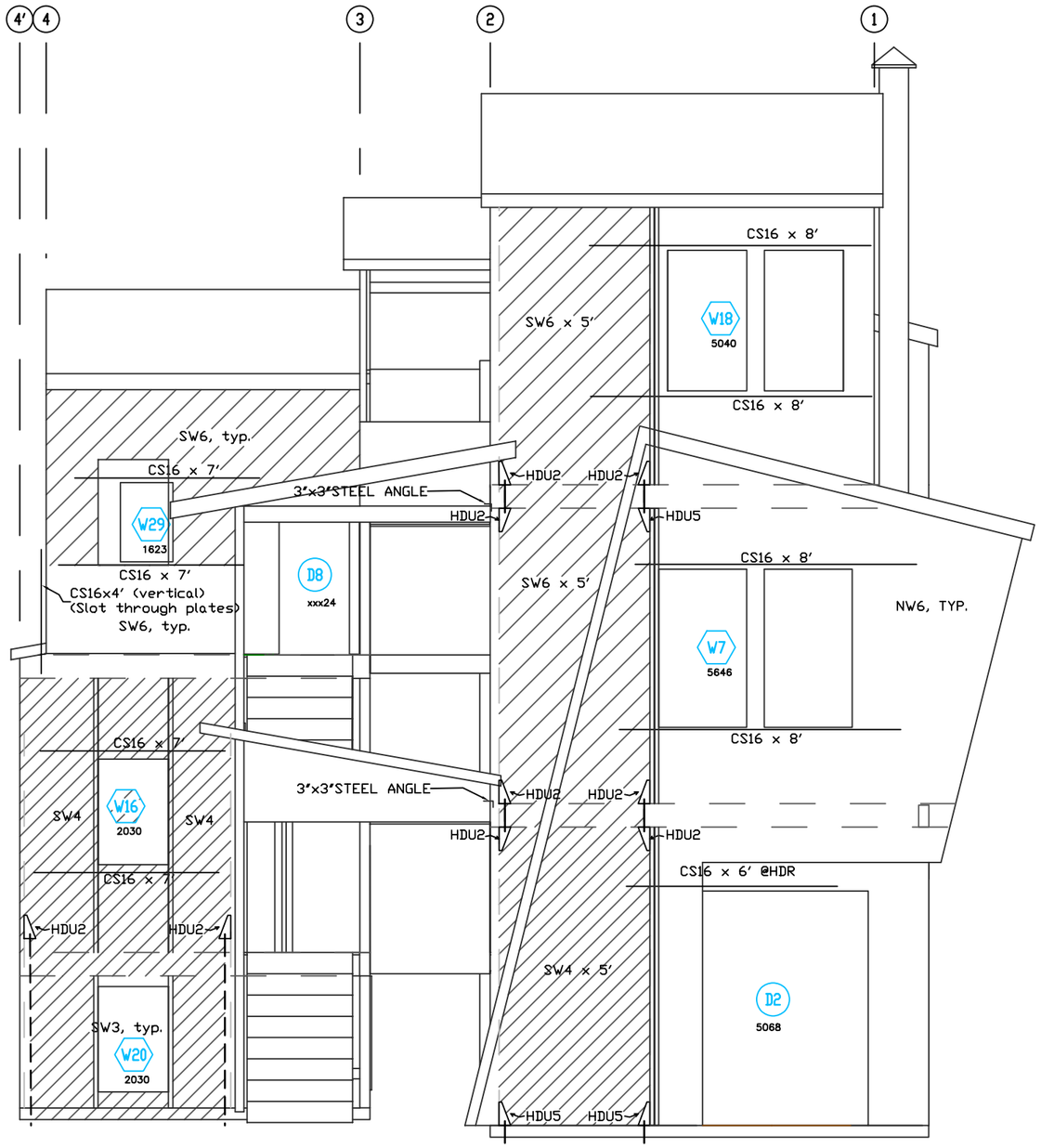

ENGR SOUTH ELEVATION

0 2' 6'

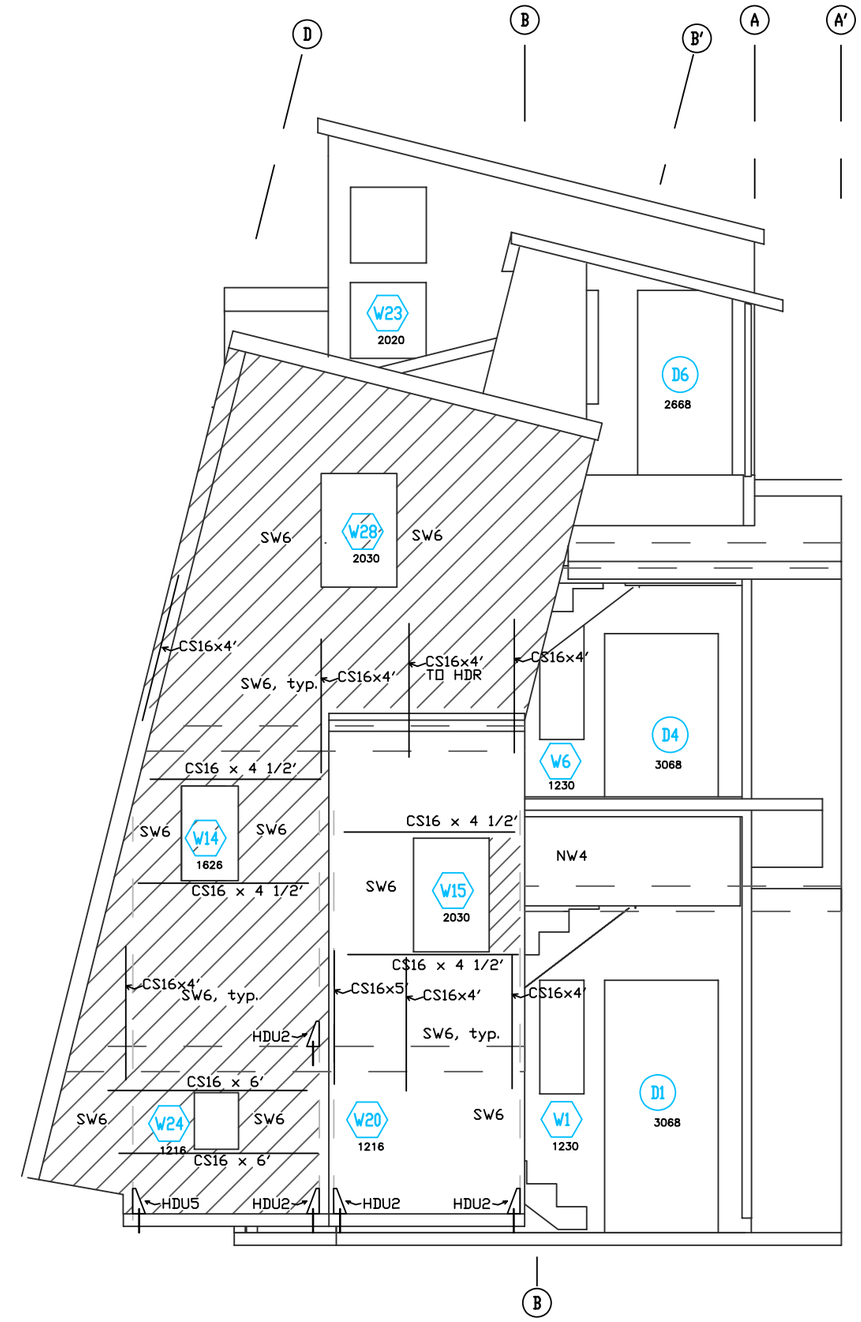

ENGR WEST ELEVATION

0 2' 6'

ENGR ELEV SOUTH, WEST

PROJ Leaning Tower Bath, Wicinas/Nishizawa

DATE 4/3/09 REV 8/2/2009 DWG BY: B. WICINAS

FOR 51101 Nash Mill Rd, Philo 95466

bwicinas@pacbell.net 510 848-1797

E8

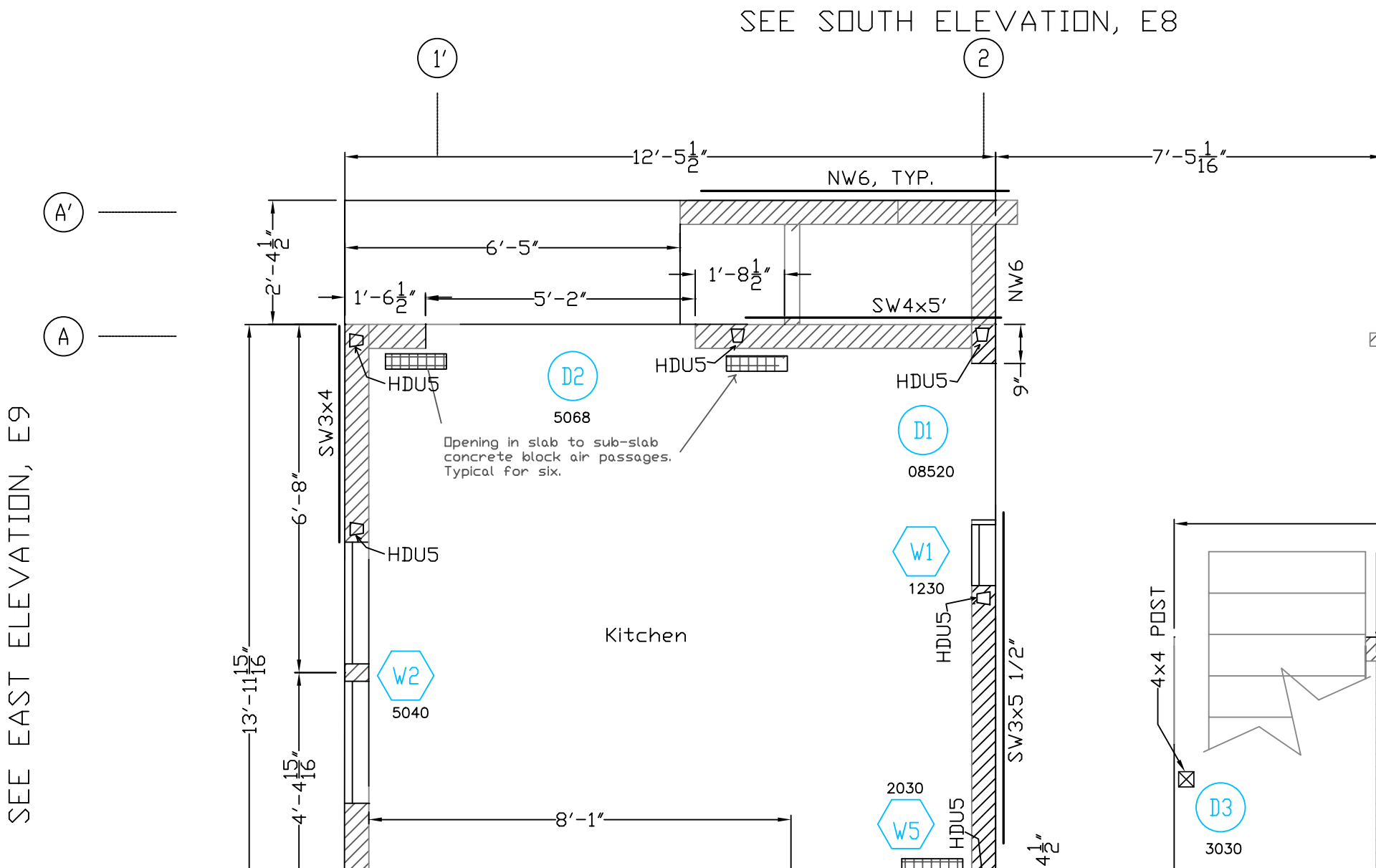
SEE SOUTH ELEVATION, E8
SEE EAST ELEVATION, E9
1'
2
A'
A
12'-5 1/2"
7'-5 1/16"
NW6, TYP.
6'-5"
1'-8 1/2"
1'-6 1/2"
5'-2"
SW4x5'
NW6
2'-4 1/2"
9"
HDU5
D2
5068
D1
08520
Opening in slab to sub-slab concrete block air passages. Typical for six.
SW3x4
6'-8"
13'-11 15/16"
4'-4 15/16"
W1
1230
Kitchen
W2
5040
SW3x5 1/2"
4x4 POST
D3
3030
2030
W5
8'-1"
4 1/2"

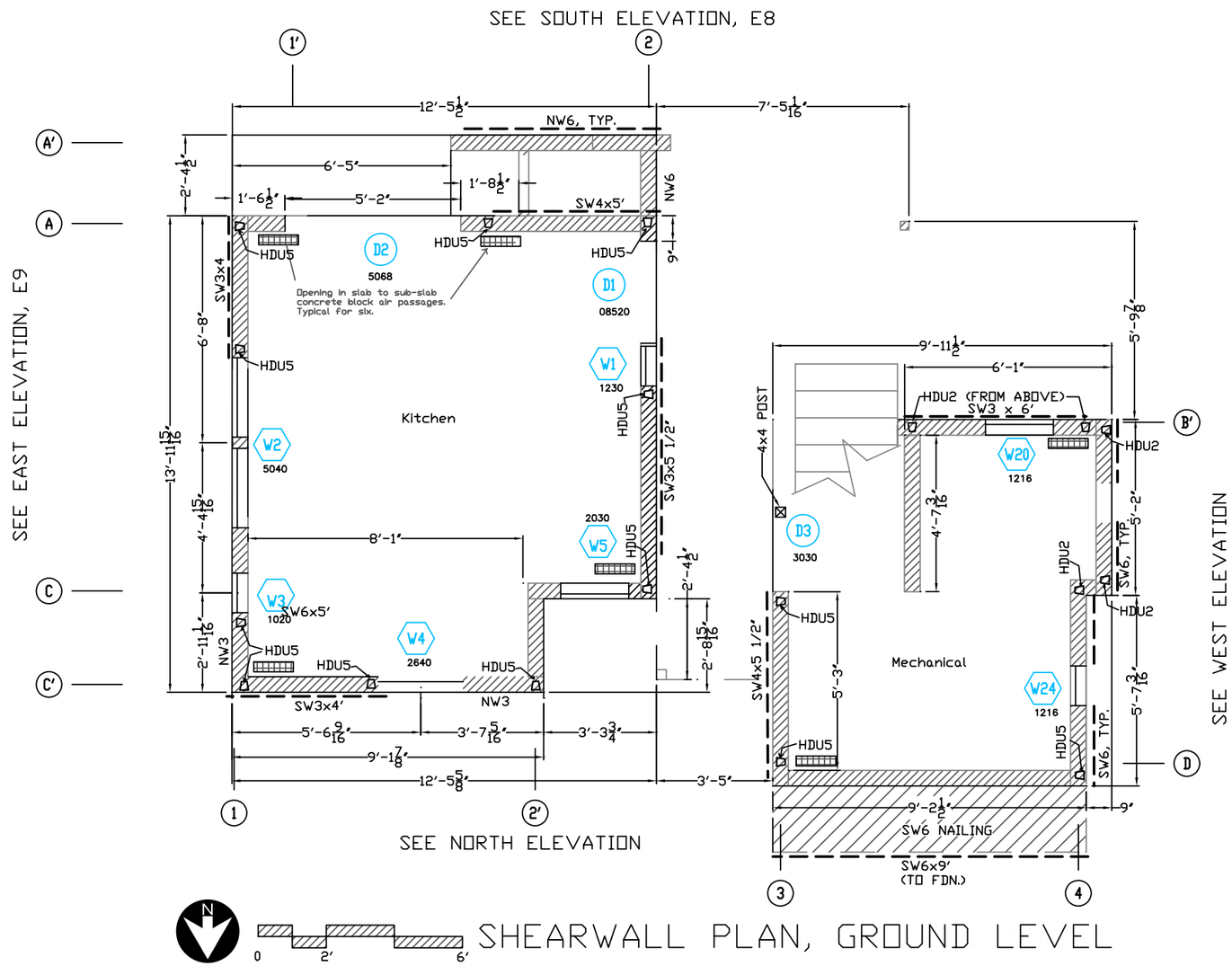

	SHEARWALL PLAN, GROUND LEVEL
PROJ	Leaning Tower Bath, Wicinas/Nishizawa
DATE	4/3/09 REV 8/2/2009 DWG BY: B. WICINAS
FOR	51101 Nash Mill Rd, Philo 95466
	bwicinas@pacbell.net 510 848-1797

E5

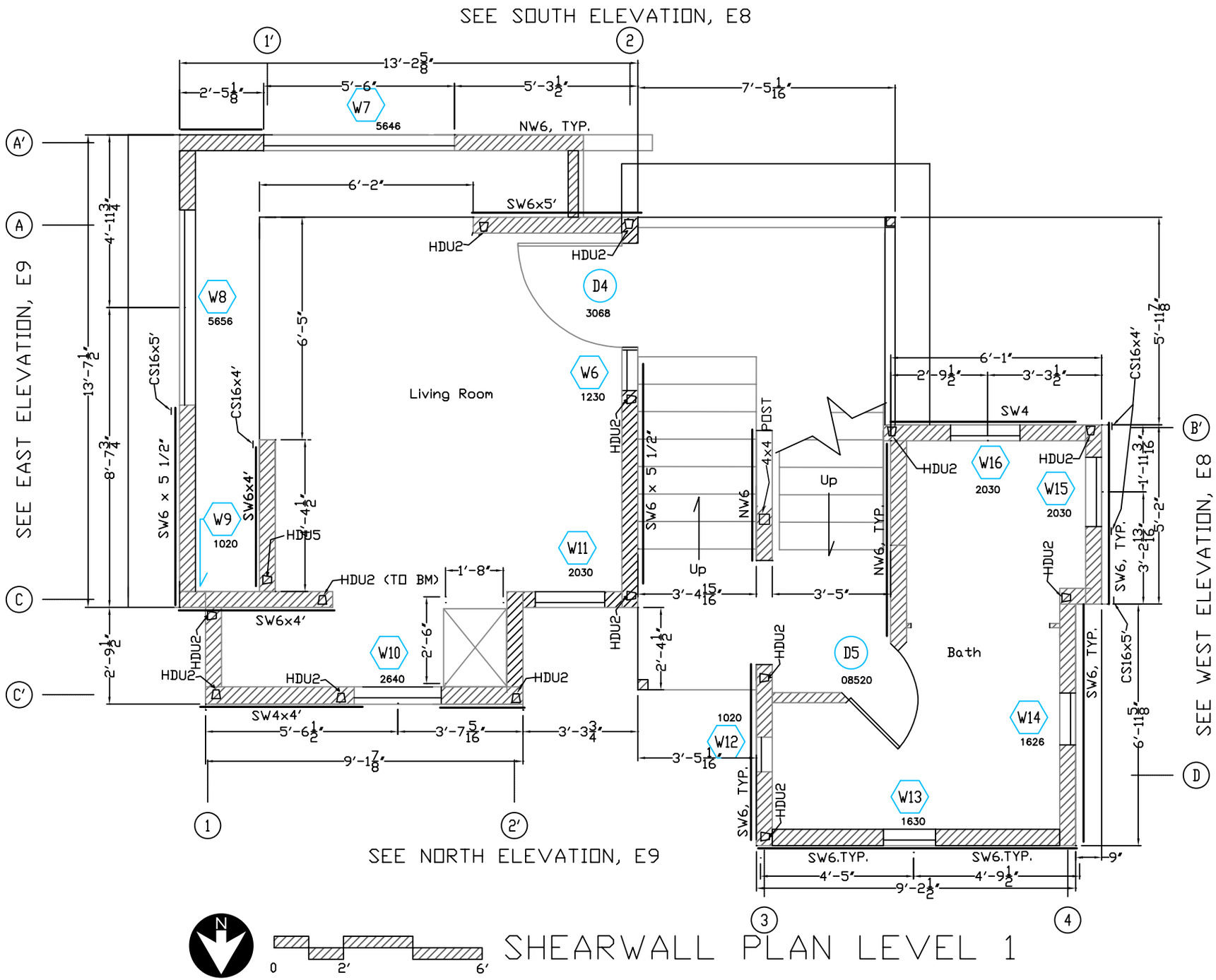
SEE SOUTH ELEVATION, E8
SEE NORTH ELEVATION, E9
SEE EAST ELEVATION, E9
SEE WEST ELEVATION, E8
Living Room
Bath
Up
W7
5646
W8
5656
W9
1020
W10
2640
W11
2030
W12
1020
W13
1630
W14
1626
W15
2030
W16
2030
W6
1230
D4
3068
D5
08520
NW6, TYP.
SW6x5'
SW6 x 5 1/2"
SW6x4'
SW4x4'
SW4
CS16x5'
CS16x4'
HDU2
HDU5
HDU2 (TO BM)
4x4 POST
SW6, TYP.
SW6.TYP.
13'-2 5/8"
2'-5 1/8"
5'-6"
5'-3 1/2"
7'-5 1/16"
6'-2"
6'-5"
4'-11 3/4"
13'-7 1/2"
8'-7 3/4"
2'-9 1/2"
4'-4 1/2"
1'-8"
2'-6"
2'-4 1/2"
3'-4 15/16"
3'-5"
5'-6 1/2"
3'-7 5/16"
3'-3 3/4"
9'-1 7/8"
3'-5 1/16"
6'-1"
2'-9 1/2"
3'-3 1/2"
5'-11 7/8"
1'-11 3/16"
5'-2"
3'-2 13/16"
6'-11 5/8"
4'-5"
4'-9 1/2"
9'-2 1/2"
9"
A'
A
C
C'
B'
D
1'
2
1
2'
3
4
N
0
2'
6'
SHEARWALL PLAN LEVEL 1

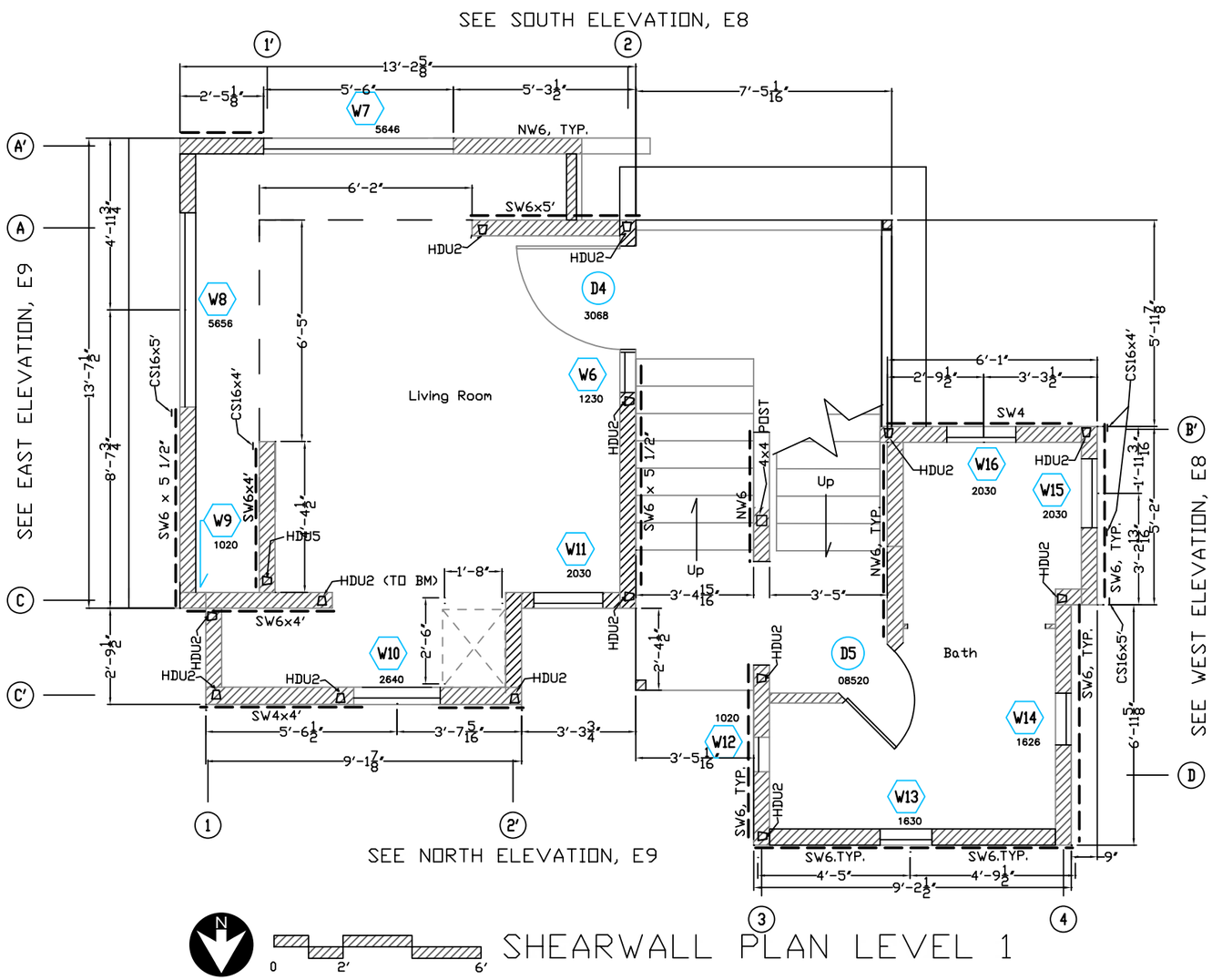

SHEARWALL PLAN LEVEL 1

	SHEARWALL PLAN LEVEL 1
PROJ	Leaning Tower Bath, Wicinas/Nishizawa
DATE	4/3/09 REV 8/2/2009 DWG BY: B. WICINAS
FOR	51101 Nash Mill Rd, Philo 95466
	bwicinas@pacbell.net 510 848-1797

E6

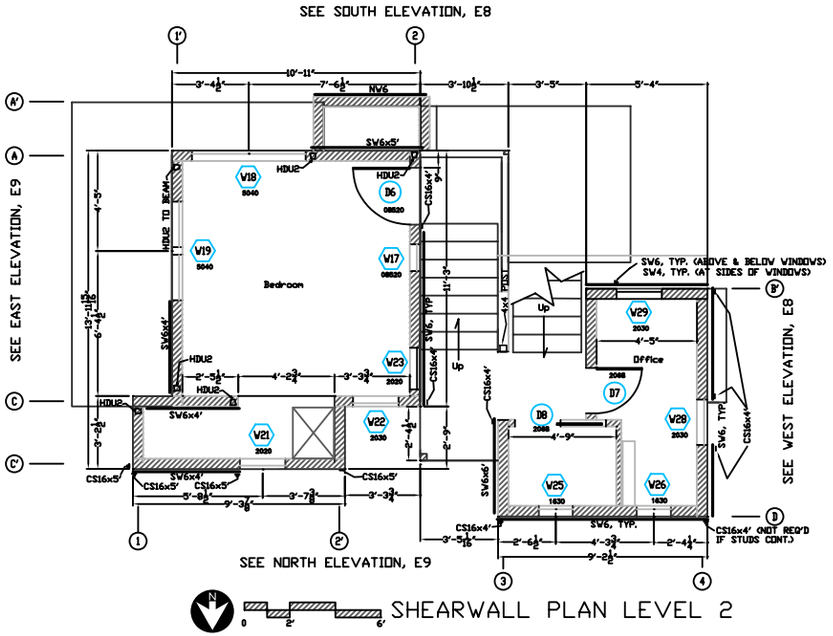
SEE SOUTH ELEVATION, E8
SEE NORTH ELEVATION, E9
SEE EAST ELEVATION, E9
SEE WEST ELEVATION, E8
Bedroom
Office
Up
SV6, TYP. (ABOVE & BELOW WINDOWS)
SV4, TYP. (AT SIDES OF WINDOWS)
CS16x4' (NOT REQ'D IF STUDS CONT.)
SHEARWALL PLAN LEVEL 2

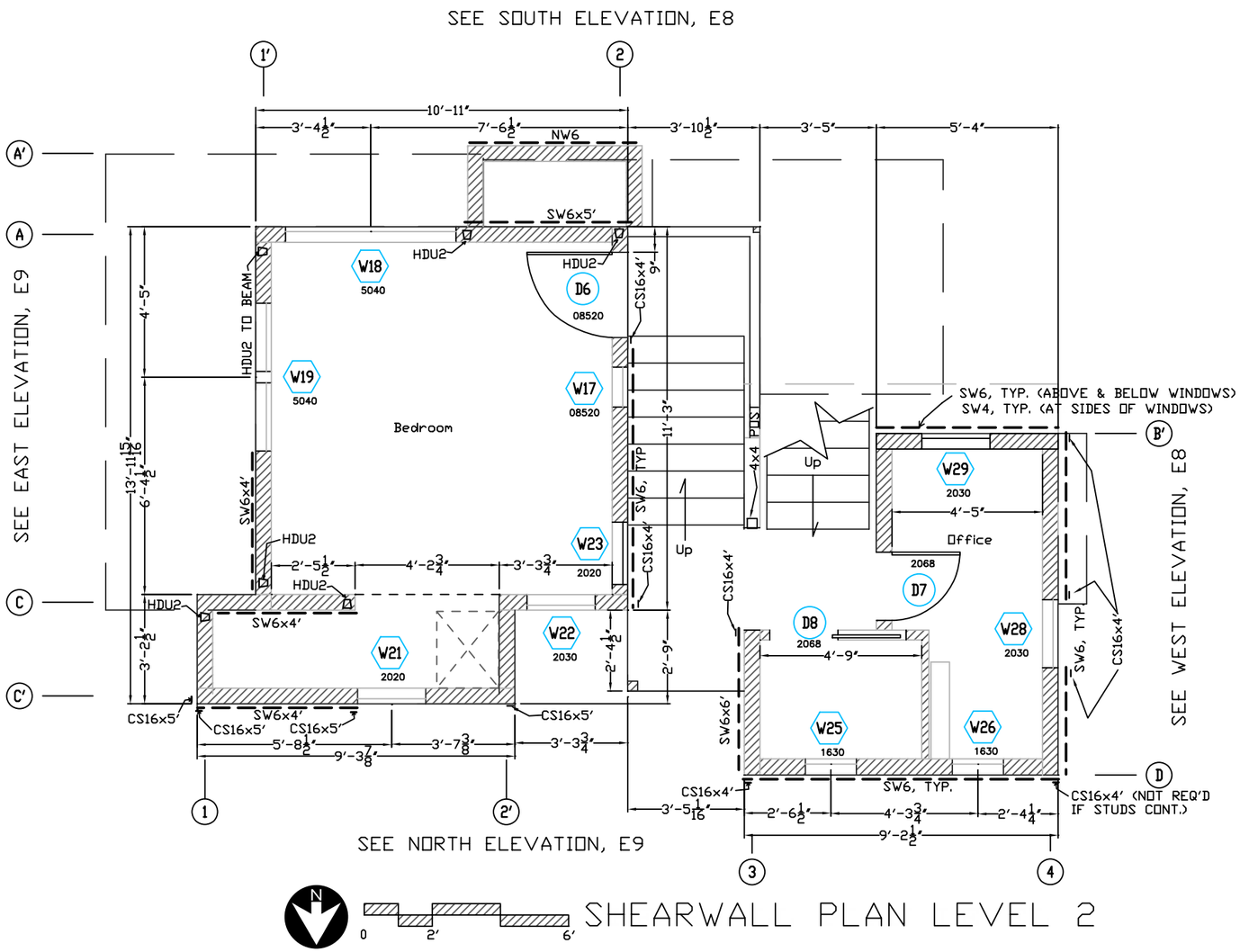

SHEARWALL PLAN LEVEL 2

PROJ Leaning Tower Bath, Wicinas/Nishizawa
DATE 4/3/09 REV 8/2/2009 DWG BY: B. WICINAS
FOR 51101 Nash Mill Rd, Philo 95466
bwicinas@pacbell.net 510 848-1797

E7